TATA MOTORS 609G

SFC DCR33CBC 85B6M5

Manufacturing	: 07/2022
No. Of Owners	: 1
Duplicate Keys	: N/A
KM Driven	: 78,699.2
Fuel Type	: CNG
Reg State	: Delhi
Reg City	: Delhi
Insurance Expiry	: 02-08-2026
RC Availability	: Yes
Permits	: State Permit
Permits Date Validity	: 25-08-2027

VEHICLE DETAILS

Registration Number	**DL 1L AH 3656**	RTO	**RAJPUR ROAD**
City	**Delhi**	RTO NOC Issued	**N/A**
Inspection At	**On-Site**	Under Hypothecation	**No**
Branch	**Delhi**	CNG/LPG Instalment	**Yes**
To be scrapped	**No**	Chassis Number Embossing	**Yes**
Manufacturing	**07/2022**	PUC Validity	**16-09-2026**
Registration	**08/2022**	MV Tax (Upto)	**31-03-2026**
Lifespan Remaining	**6 Months, 11 Years**	Fitness (Upto)	**23-08-2026**
RC Mismatch if any	**No**		

SUMMARY

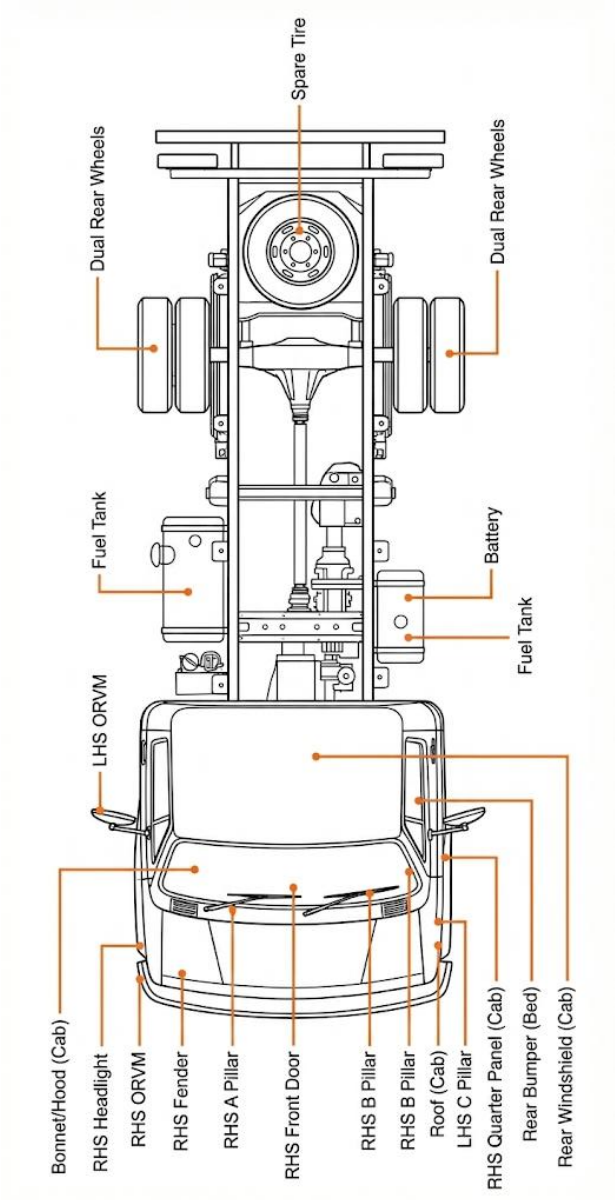

Exterior + Tyres

Part	Sub-Part	Status	Remarks / Condition
Bumper	Front / Rear	!	Minor dent at the back bumper.
Cabin Panels	LHS / RHS	✓	
Bonnet / Hood	—	!	Slightly dislocated on the left and right sides of the Bonet.

Roof (Cab)	—	✓	
Fender	LHS / RHS	✓	
Doors	LHS / RHS	✓	
Windshield	Front / Rear	✓	
Pillars	A / B / C	✓	
Load Body Floor	—	✓	
Side Panels	—	✓	
Tailgate	—	!	Minor dent at the back bumper.
Chassis Visible Area	—	✓	
Tyres	1	✓	50-60%
Tyres	2	✓	60-70%
Tyres	3	✓	60-70%
Tyres	4	✓	70-80%
Spare Tyre	—	N/A	
Wheels / Rims	—	✓	

Electricals + Interior

Part	**Sub-Part**	**Status**	**Remarks / Condition**
Battery	—	✓	

Wiring Harness	—	✓	
Headlights	LHS / RHS	!	LHS Slightly damaged
Tail Lamps	LHS / RHS	✓	
Indicators	—	✓	
Horn	—	✓	
Instrument Cluster	—	✓	
Warning Lights	—	✓	
Dashboard	—	✓	
Seats	Driver / Co-driver	!	Both the seats are slightly worn out.
Seat Belts	—	✓	
Cabin Fan / Blower	—	✓	
Wipers	—	✓	

Engine + Transmission

Part	Sub-Part	Status	Remarks / Condition
Cold Start	—	✓	
Idling	—	✓	
Blow-by	Dipstick Test	✓	
Exhaust Smoke	—	✓	

Engine Oil	—	✓	
Coolant	—	✓	
Oil Leakage	—	✓	
Fuel Injection	—	✓	
Turbocharger	—	✓	
Clutch	—	✓	
Gear Shifting	—	✓	
Gearbox Noise	—	✓	
Propeller Shaft	—	✓	
Differential	—	✓	

Steering / Suspension + Brakes

Part	Sub-Part	Status	Remarks / Condition
Steering Free Play	—	✓	
Steering Box	—	✓	
Kingpin / Ball Joint	—	✓	
Leaf Springs	—	✓	
U-Bolts & Clamps	—	✓	
Shock Absorbers	—	✓	

Front Axle	—	✓	
Brake Pedal Feel	—	✓	
Brake Pull	—	✓	
Brake Lines	—	✓	
Parking Brake	—	✓	

Vehicle Photo Documentation Sheet

PROFILE	PHOTOGRAPH
1	

2	
3	

4	
5	

6	
7	

8	
9	

10	
11	

TYRE 1	
TYRE 2	

TYRE 3	
TYRE 4	